pUSB ver 1.0

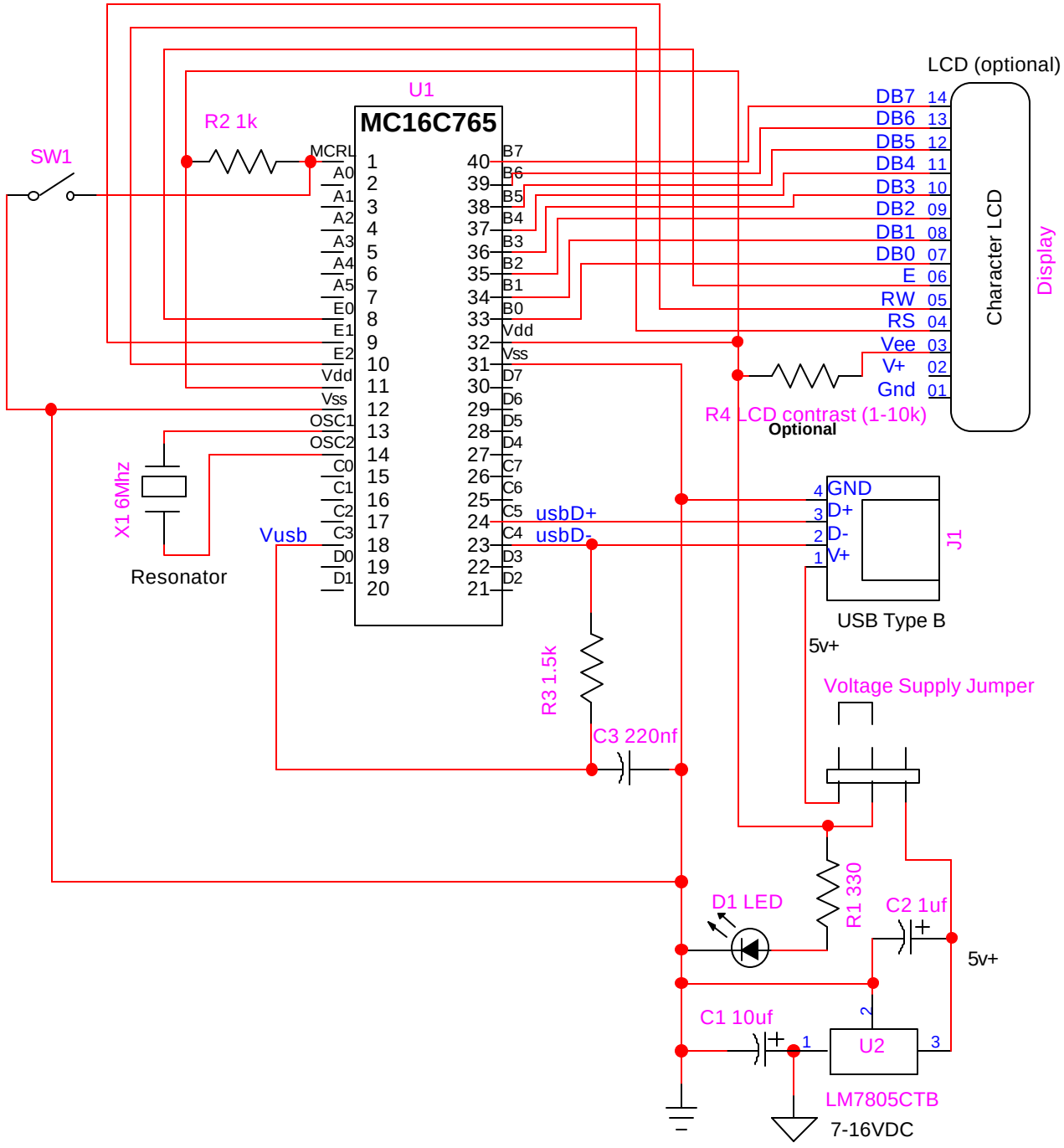

Design:	**pUSB Ver 1.0**
Author:	**Ranjit Diol**
Company:	**(c)COMPSys**
Date:	**Jan 2003**