GLI2 Controller Board

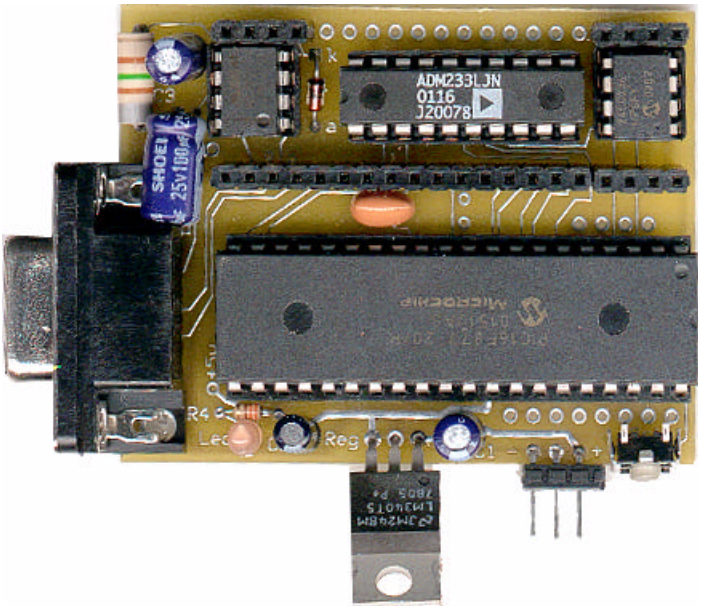

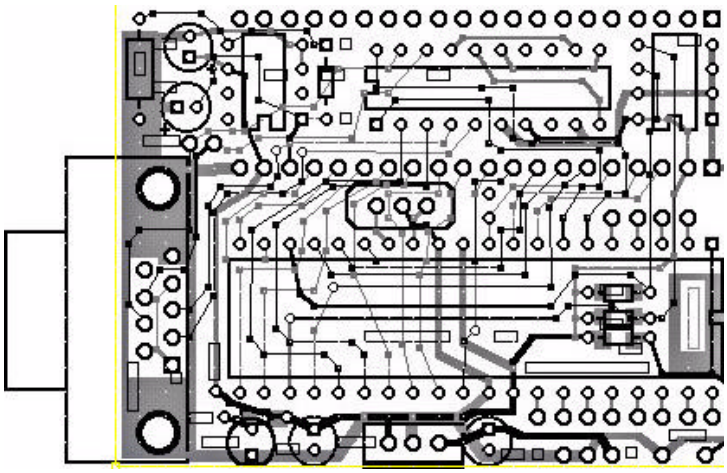

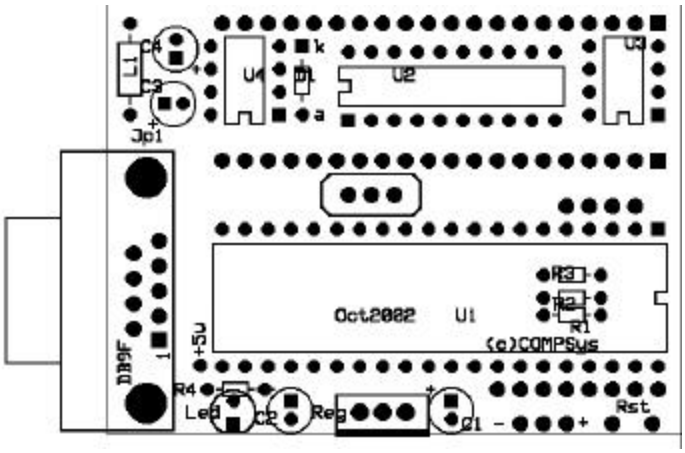

PARTS LIST

- R1 - 1K resistor
- R2,R3 - 4.7k or 10k resistor
- R4 - 330 ohm resistor
- C1,C4 - 10uf radial capacitor
- C2 - 0.1 or 1uf radial capacitor
- C3 - 100uf radial capacitor
- D1 General purpose diode
- L1 150mH or 330Mh inductor
- LED Light emitting diode
- X1 20 Mhz resonator
- 4 IC sockets

*C4 10uf may be a small size

- U1 PIC16F877 20Mhz controller
- U2 Max233 or equiv. RS232 transceiver
- U3 24LC256 I2C eeprom
- U4 Max637 voltage booster
- REG LM7805 5volt regulator
- Reset momentary contact switch
- DB9 Female RS232 connector
- 1 - 20-pin female header
- 2 - 4-pin female headers (for support)
- 3-pin rt angled male header for power supply
- 2-pin jumper header (optional)

GLI2 Board Assembly Notes

IMPORTANT!
Please read before proceeding any further.

It is assumed that you purchased this kit with the knowledge that it will require soldering parts to a printed circuit board. This assembly will require some very delicate soldering. if you feel that you do not have the necessary soldering skills, please seek assistance from someone who does. Small mistakes in soldering can result in many frustrating hours of re doing work. Double check each component for value , orientation and placement on the pcb before actually soldering it Please use a very fine tip (25W max) soldering iron and quality solder such as .022 (or finer) silver-based solder. Other tools required include small tweezers, long nosed pliers, diagonal cutters and a multimeter.

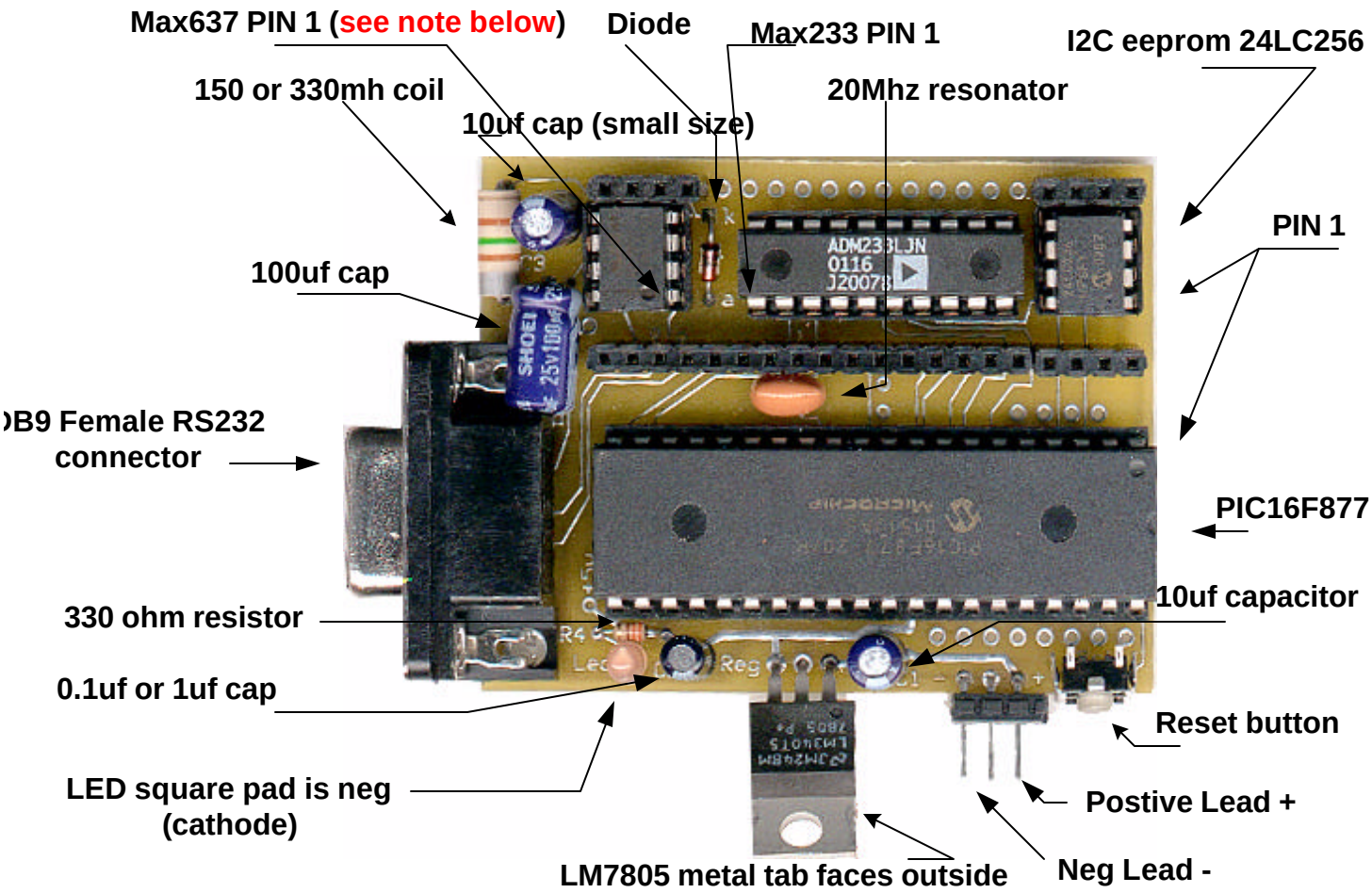

PLEASE NOTE BELOW: Max637 pc board Ver A boards correction required

GLI2 Ver A boards only.
Pins 7 and 8 of the Max637 need to be connected together. Use a piece of wire to connect PINS 7 and 8 of the Max637 IC socket pins together and solder into position,

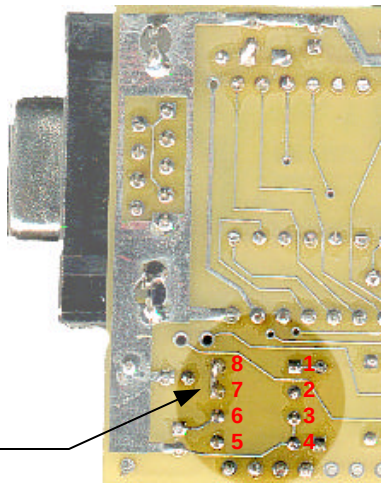

Bottom side of pcb showing the Max637 IC pins (square pad is PIN 1)

GLI2 Rev C addendum

The GLI2 Rev C board has several changes:
1) Replaced IC233 20 pin dip with a surface mount IC232 along with surface mount caps
2) Axial or SMD resistor chips can be used for R1-R3 (4.7K or 10K) and R4 (1K).
3) Added two 0.1uf decoupling SMD capacitor chips C9,C10.
4) Added option to install a power supply protection diode

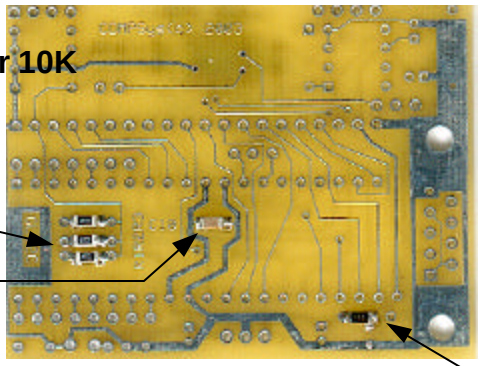

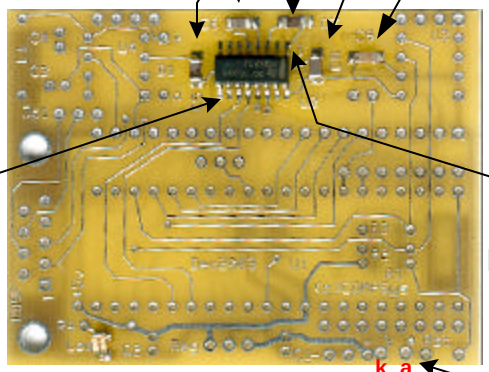

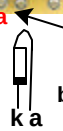

1N4001 diode
banded end is the cathode k

IMPORTANT NOTES

C5-10 are non-polar chips and have no markings.
C5-8 are 1uf chips and are darker in color
C9,10 are 0.1uf chips and have a light tan color.

Mount the SMD parts first. To facilitate assembly, apply a tiny amount of solderto the pads of the SMD cpas and resistors prior to soldering the parts.
PLEASE be sure to orient the IC232 as shown above.

GLI2 Assembly

Step 1: Observe proper orientation and polarity and then mount and solder the passive components (See C3 note below) as well as the LM76805 voltage regulator. Note: the LM7805 metal TAB faces the outside.

PCB square PADs:
1. CAPS the square pad is the + positive lead
2. DIODE the square pad is the CATHODE (neg)
3 ICs the square pad is PIN 1
4 LED the square pad is the CATHODE (neg) lead

Special Note on for mounting C3 (100uf cap):

Mount C3 with approx 1/2" extra lead and bend the leads 90 degrees so that the cap lies horizontally with extra clearance between the pcb. C4 10uf is a small size cap

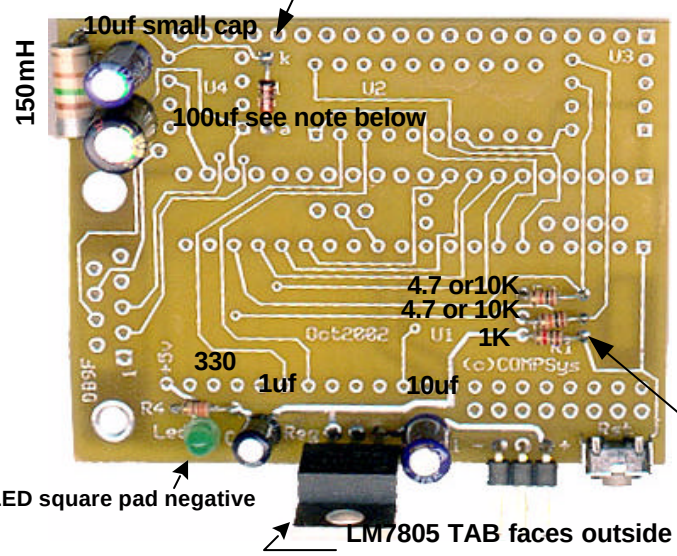

Resistors may be mounted on the the top or bottom of the pcb. If surface mount resistors are used they will mount on the bottom side of the pcb.

Step 2: Mount the IC sockets, the RS232 socket and the female interconnect headers

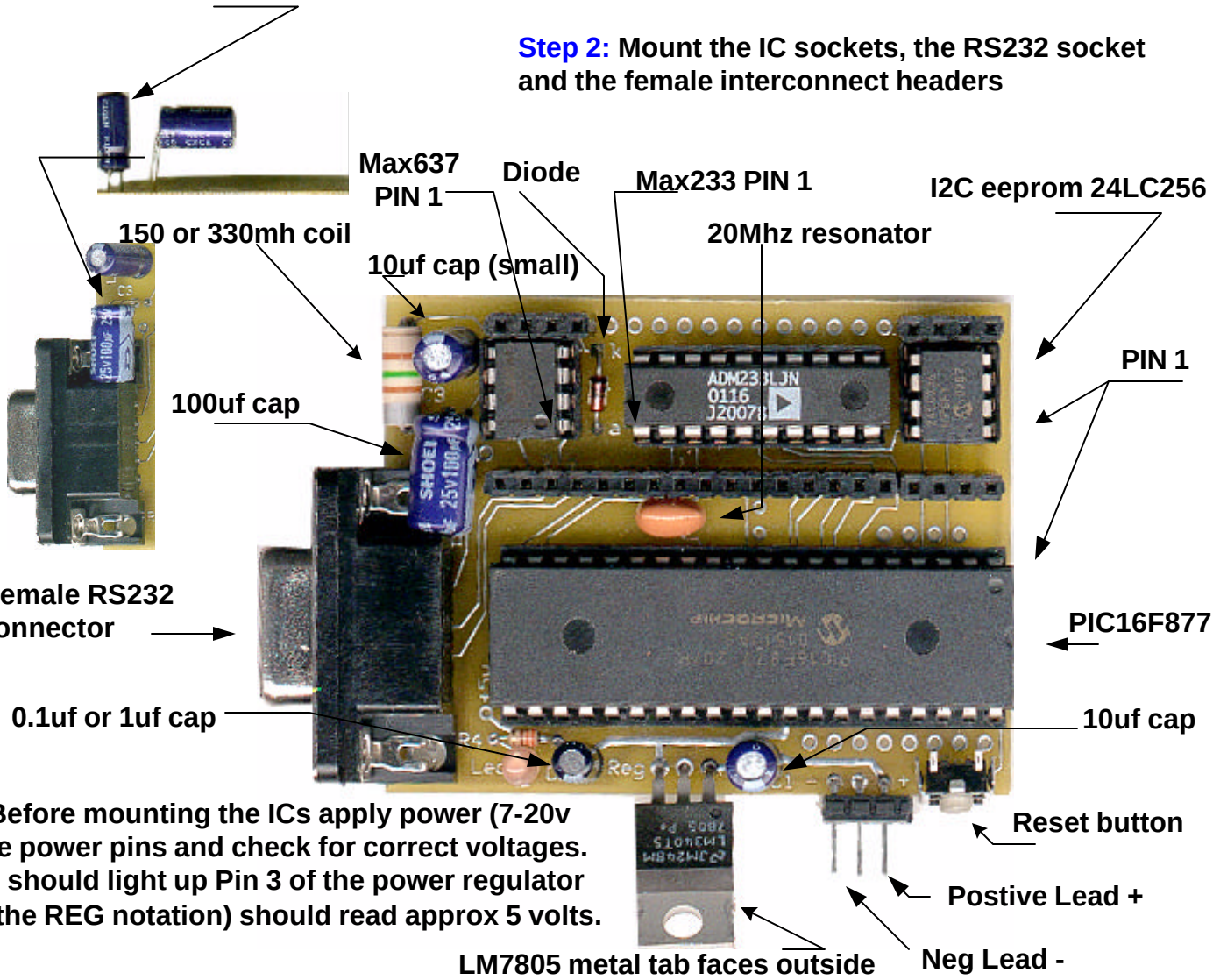

Step 3: Before mounting the ICs apply power (7-20v dc) to the power pins and check for correct voltages. The LED should light up Pin 3 of the power regulator (next to the REG notation) should read approx 5 volts.

DO NOT REVERSE SUPPLY POLARITY!

GLI2 Adapters

Several low cost adapters are available for a variety of small to mid sized LCD displays. Each adapter fits on top of the GLI2 board by mating with a 20-pin female header and two 4-pin support headers.

The adapter kits include all headers, jumpers and contrast adjustment POT

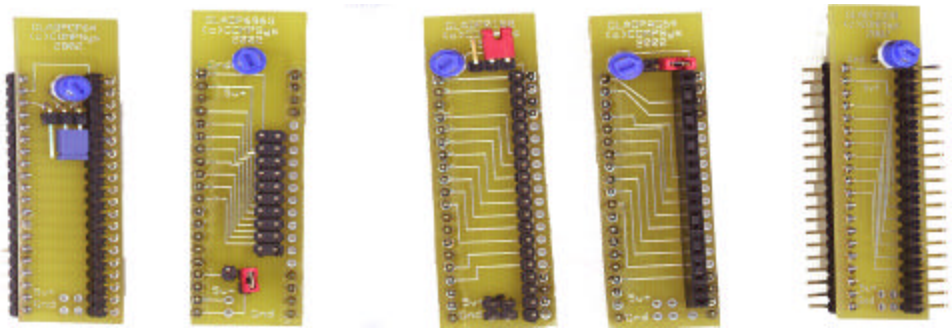

Multi-pin LCD header, depending on the LCD it may vary in the number of pins and type of header.

Two 4-pin support headers

Contrast adj POT

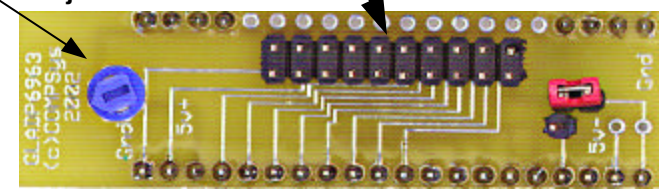

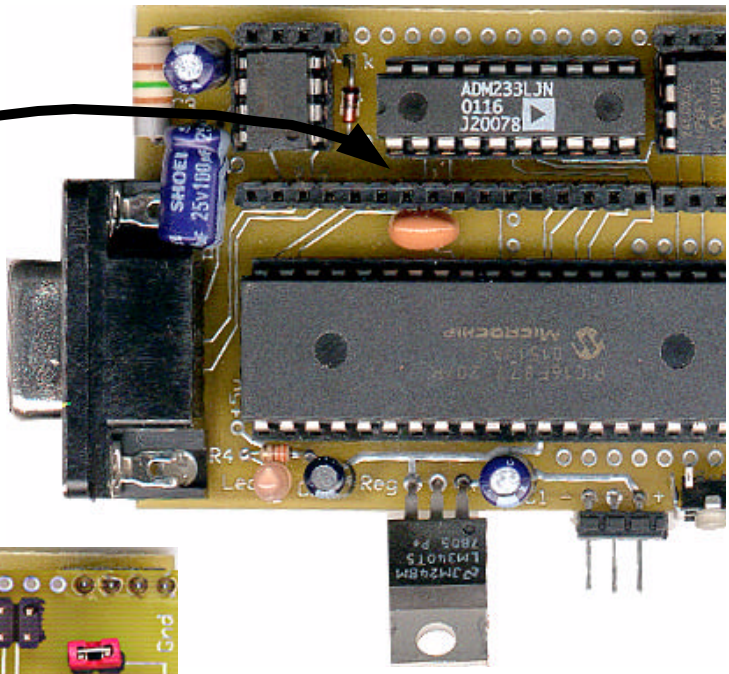

20 Pin male header (bottom of the adapter) mates with the 20-pin female header on the GLI2 board.

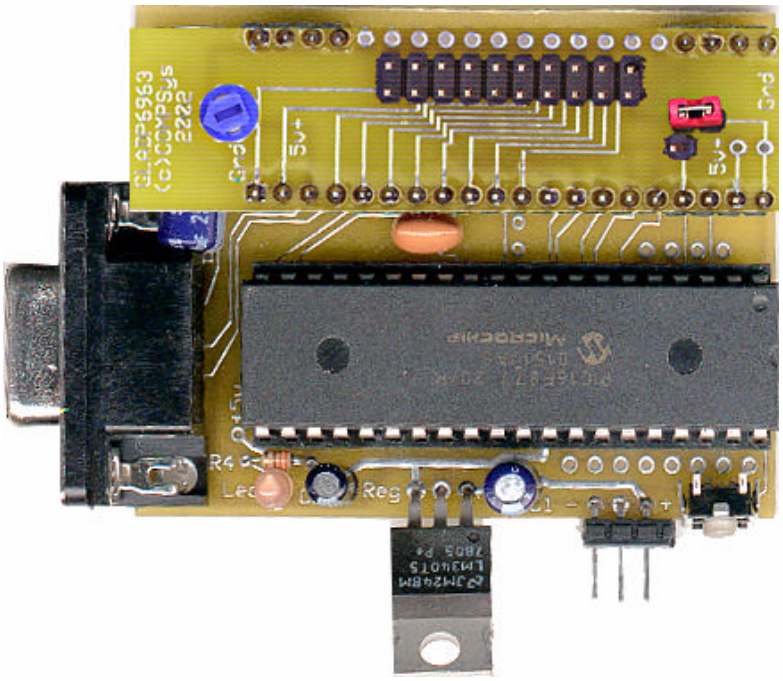

Shown with GL2AD6963 adapter mounted

GLI2 Schematic

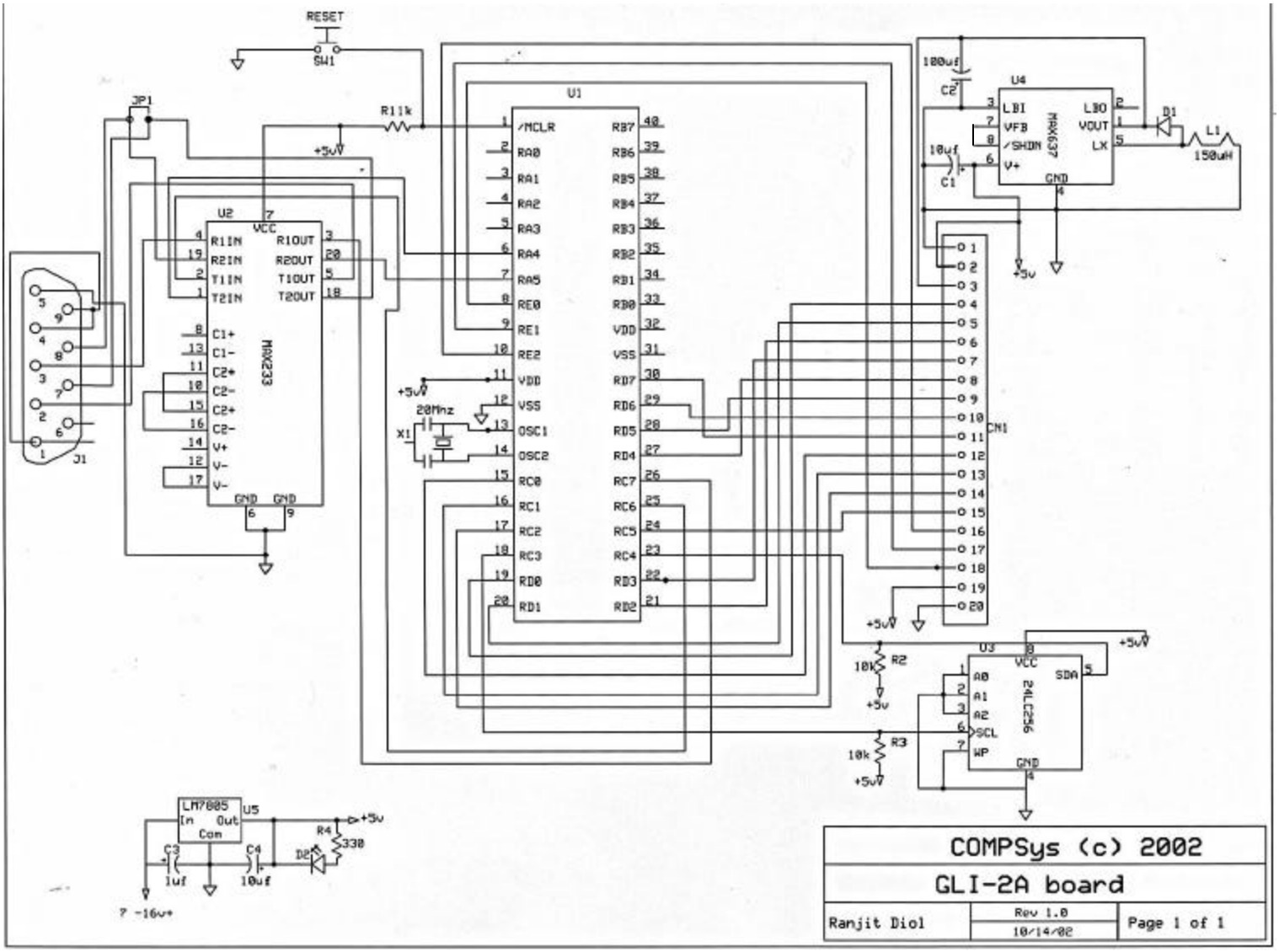

Design may vary and or be modified without notice