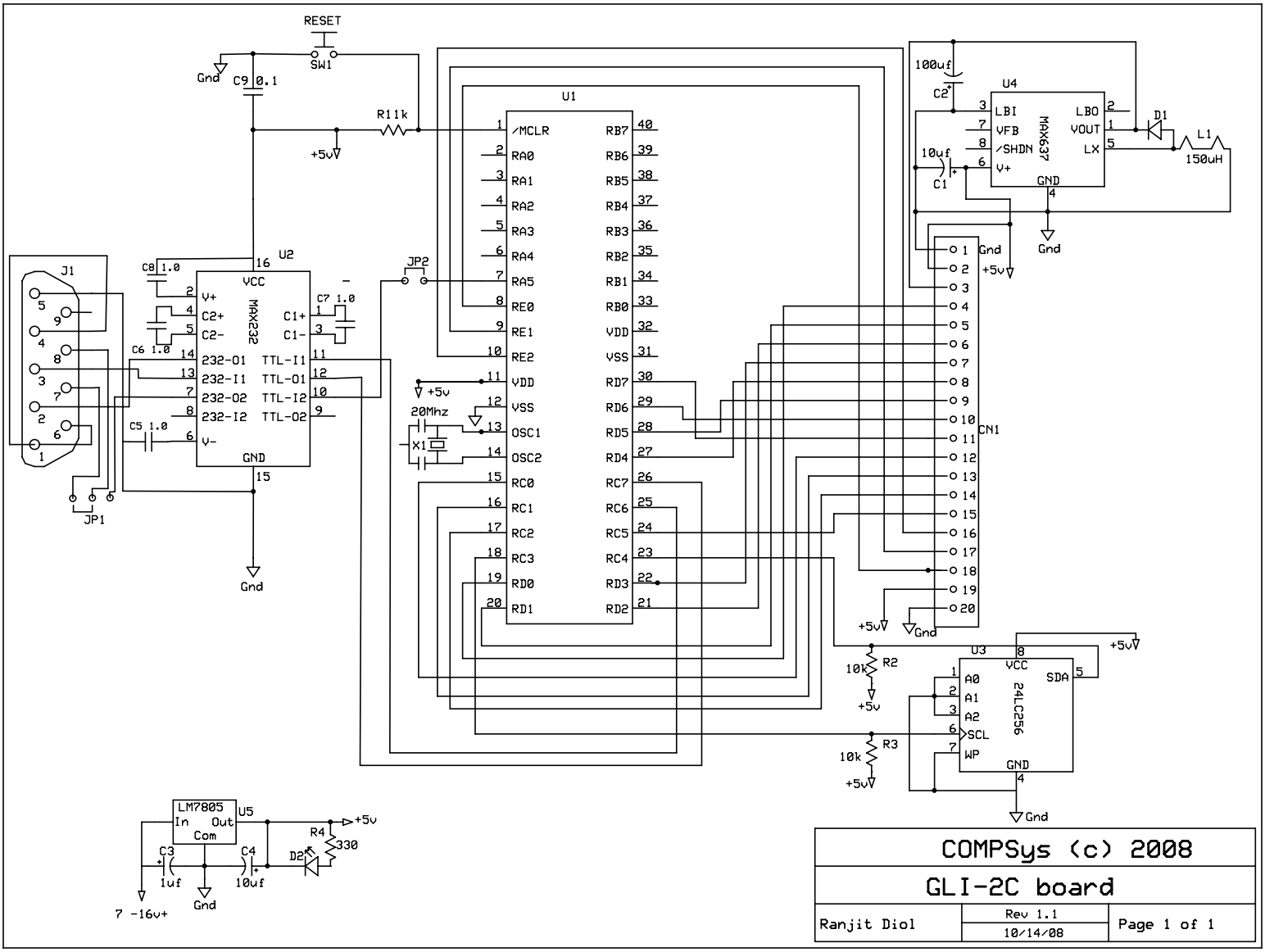

COMPSys (c) 2008		
GLI-2C board		
Ranjit Diol	Rev 1.1 10/14/08	Page 1 of 1