Jumpers: J1 connects LCD pins 29 and 30 to V+
and J2 connects LCD pin 28 to gnd

Optrex 51553 PCB

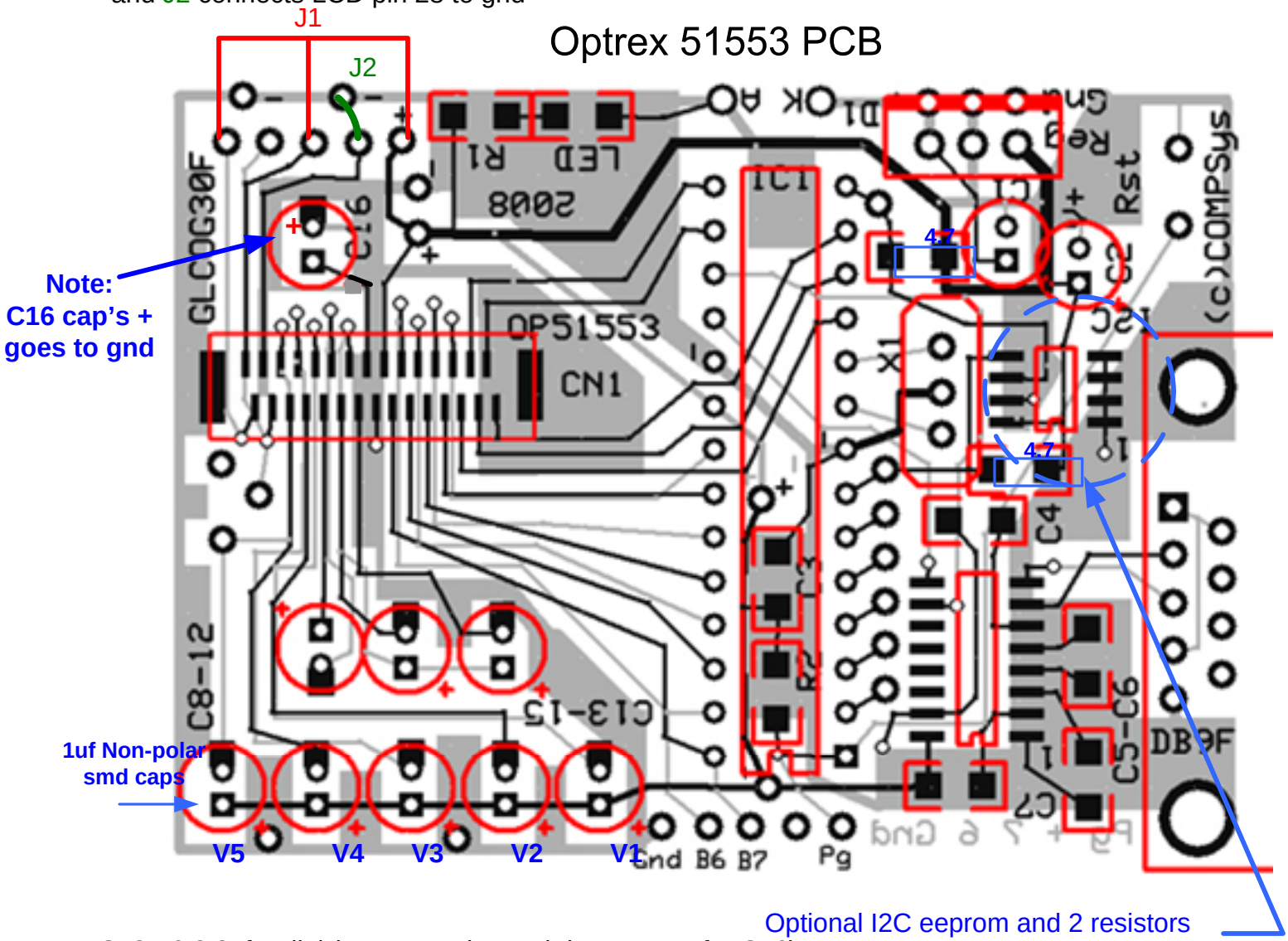

C13-16 2.2uf radial (square pad on pcb is + except for C16)
C4-C12 1uf SMD
C1 10uf radial
C2 0.1uf radial
C3 0.1 uf SMD
R1 330 SMD
R2 4.7k SMD
LM7805 regulator
D1 1N4001 diode
LED SMD
X1 10 Mhz resonator
Reset switch
DB9 F connector
28 pin DIP socket
CN1 FFC30 connector
28 Pin PIC mcu
RS232 IC SMD

MCU	B7	B6	B5	B4	B3	B2	B1	B0	C0	C4	C1	C5	C2
LCD	D7	D6	D5	D4	D3	D2	D1	D0	RD	WR	A0	Res	CS1
	13	12	11	10	09	08	07	06	05	04	03	02	01

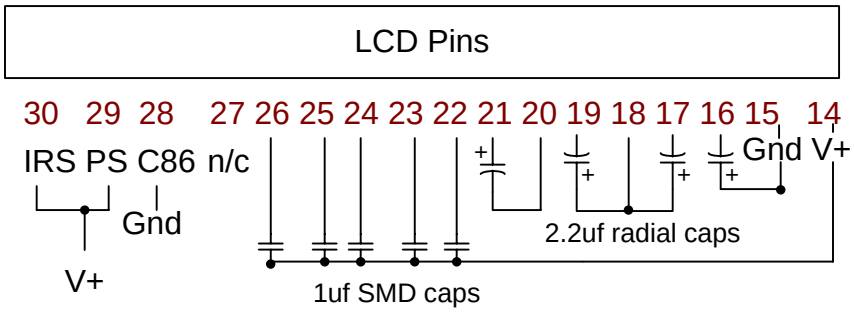

Optional:
I2C SMD eeprom and two 4.7k pull-up SMD resistors

PIC Optrex 51553 COG LCD controller Schematic

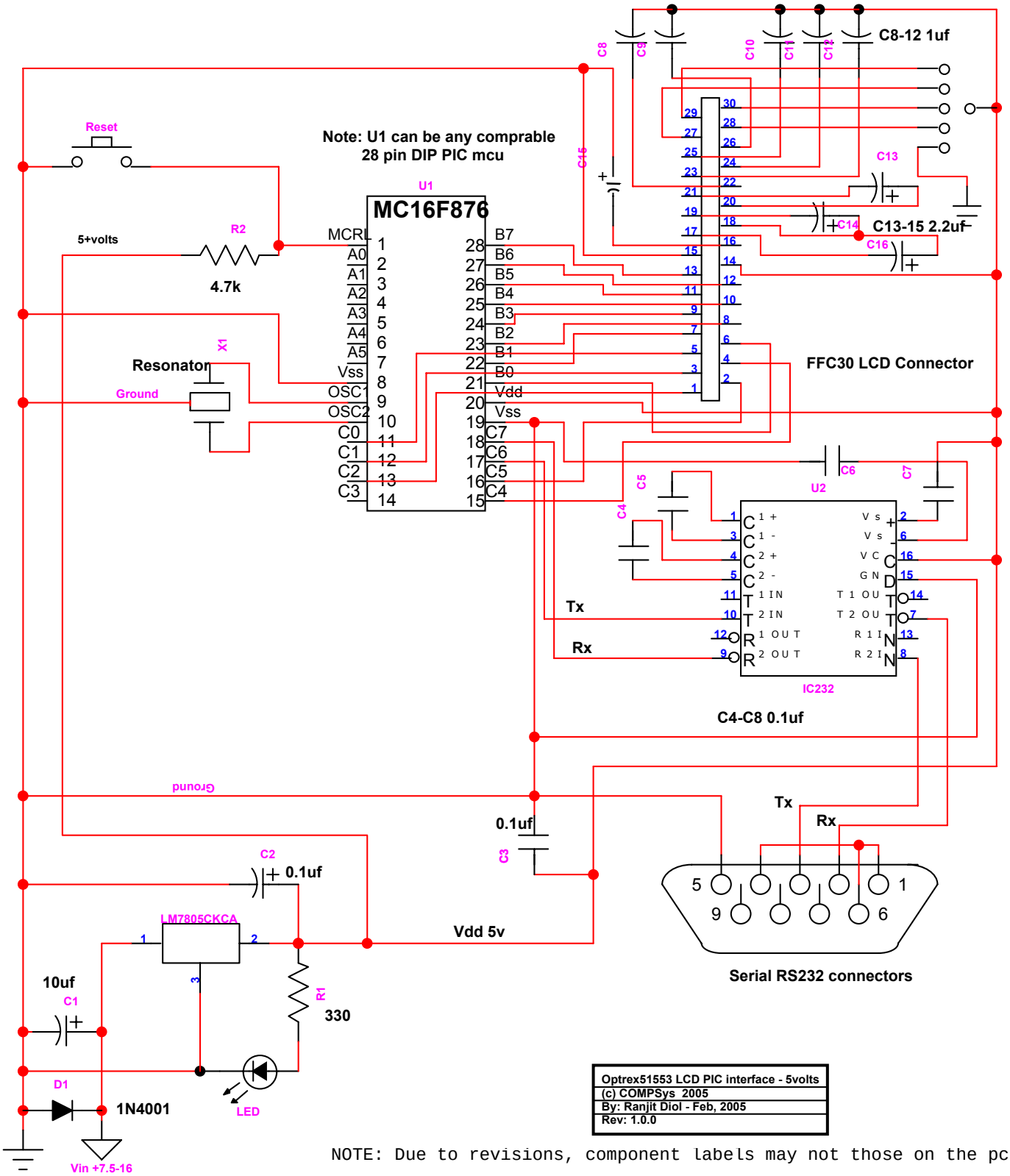

Optrex51553 LCD PIC interface - 5volts
(c) COMPSys 2005
By: Ranjit Diol - Feb, 2005
Rev: 1.0.0

NOTE: Due to revisions, component labels may not those on the pcb