BTM-182 RS232 5v Board Ver 1

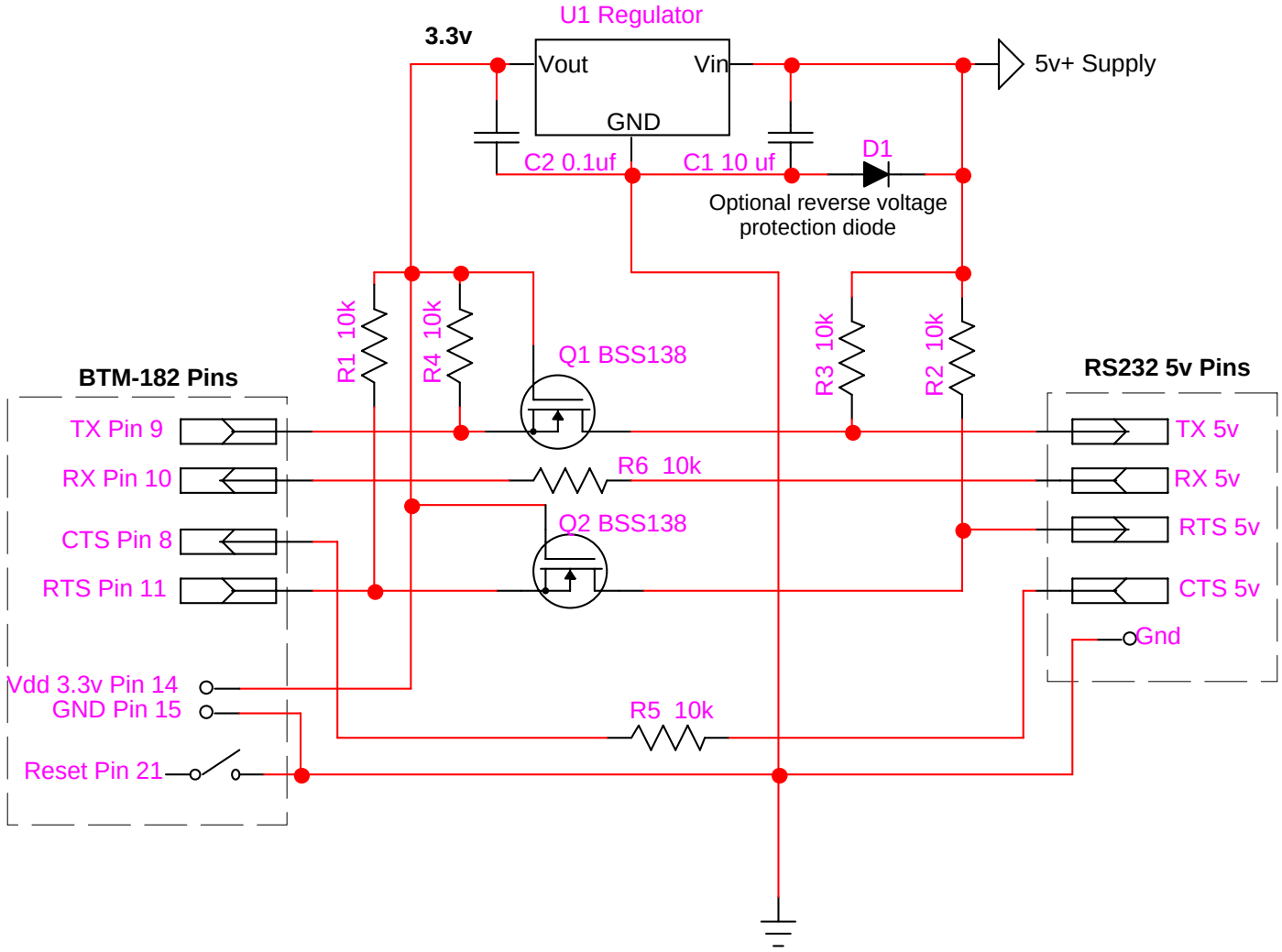

BTM-182 Rev 1
R Diol Feb 2011
COMPSys Workbench